Matrilineal Spirits, Descent and Territorial Power in Northern Thailand
Andrew Walker
The Australian Journal of Anthropology; 2006; 17, 2; Academic Research Library
pg. 196

Matrilineal Spirits, Descent and Territorial Power in Northern Thailand

Andrew Walker
Resource Management in Asia Pacific Program,
The Australian National University

This paper examines matrilineal spirits (*phii puu nyaa*) in northern Thailand based on field research recently undertaken in a village in Chiang Mai province. The paper suggests that the *puu nyaa* spirits remain locally significant—despite previous statements about their demise—and that matrilineal linkages are ideologically and practically important in the constitution of the groups. Nevertheless, there are alternative points of reference—to fathers, spouses and localities—that can attenuate attachments to matrilineal kin and introduce alternative sources of spiritual power. It becomes clear that *phii puu nyaa* spirit beliefs and practices are malleable and provide a basis for various orientations to spiritual power. The intermingling of different types of spiritual power is well illustrated by the presence of protective spirits locally referred to as *aahak*. In local perception, there is a very close relationship between *phii puu nyaa* and *aahak*, but the two entities appear to reflect quite different orientations: in simple terms the *aahak* represent a masculine, territorial and outward looking form of power which is contrasted with the female-focused and lineage-derived potency of the *puu nyaa* spirits. The paper argues that the outward orientation of the *aahak* provides some valuable insights into local perceptions of power, demonstrating how the supposedly peripheral and parochial draws regional power into more intimate domains.

In Thailand, as in many other parts of the world, there is considerable academic and policy interest in the relationship between local communities and 'higher' levels of authority. Initiatives as varied as administrative decentralisation, electoral reform and participatory land-use planning have focused attention on the ways in which local institutions articulate with—and are affected by—the national bureaucracy in its various manifestations. In a series of articles (Walker 2001, 2004a, 2004b), I have suggested that much of the anthropological discussion on such issues—particularly in relation to the management of natural resources—has been constrained by a framework that over emphasises the tension between local practices and the external forces of state and market. I have proposed that many academic and non-government organisation portrayals of local village institutions tend to be overly parochial and too readily assert that 'incorporation' is a primary source of livelihood insecurity and cultural decline. In this paper, my intention is to approach this issue from a rather different perspective.

THE AUSTRALIAN JOURNAL OF ANTHROPOLOGY, 2006, 17:2, 196-215

Reproduced with permission of the copyright owner. Further reproduction prohibited without permission.

My focus here is on the matrilineal spirits (*phii puu nyaa*) of northern Thailand and their contemporary role in the lowland village of Baan Tiam[1] in Chiang Mai province. These spirits were the subject of a special issue of *Mankind* (*Spirit Cults and the Position of Women in Northern Thailand*, Cohen and Wijeyewardene 1984a). One of the key issues discussed in that collection was the extent to which matrilineal descent is the basic criterion for recruitment to the *puu nyaa* spirit groups and for transmission of ritual office. An emphasis on descent was contrasted with an alternative emphasis on locality, co-residence and shared economic interest in the constitution of the spirit groups. In this paper, I suggest that matrilineal linkages between closely related kin are ideologically and practically important in the constitution of the groups. But there are also social dynamics that introduce alternative points of reference—to fathers, spouses and localities—that can weaken attachments to matrilineal kin and provide for alternative alignments with spiritual power.

Another issue discussed in the collection was the future of the matrilineal spirit cults. Some writers expressed the view that *puu nyaa* spirit beliefs were in steady decline as a result of demographic change, the psychological impact of modernisation, uneven economic development and the breakdown of village authority structures (Mougne 1984: 306; Irvine 1984: 315). Though there has been relatively little more recent work on *puu nyaa* spirits, a number of observers have added weight to these views. Gray (1990), for example, notes the rapid abandonment of beliefs in the spirits, particularly among young women close to the modernising influence of Chiang Mai city. And Tanabe (2002: 52) has suggested that the 'reorganisation of spatial and social divisions by the nation-state' along with increasing mobility, modern communication and 'involvement in capitalist relations' has resulted in *phii puu nyaa* worship becoming a 'minimal ritual practice'. Of course, it would be overly ambitious to use evidence from a single village to challenge the general validity of these observations. But the material in this paper does suggest that, in some areas at least, the *phii puu nyaa* retain local salience. More importantly, the paper also argues that although external influences can be seen as challenging some aspects of local spiritual authority, the malleability of *puu nyaa* belief enables it to accommodate new ways of aligning with spiritual power. In the second half of the paper, I focus on three issues that highlight the dynamism of the relationship between external orientations and *phii puu nyaa* matriliny: the dramatic decline in village endogamy; the Thai state's introduction of patrilineally inherited surnames; and local links with regionally important tutelary spirits.

One of the specific ethnographic contributions of this paper is to draw attention to the presence of protective spirits locally referred to as *aahak*. These *aahak* prompt interesting new directions for ethnographic enquiry into the *phii puu nyaa*. While the presence of the *phii puu nyaa* are marked by small shelves in the main bedroom of particular houses, the *aahak* reside in external shrines at these same houses. In local perception, there is a very close relationship between *phii puu nyaa* and *aahak* but the two entities (on the occasions when they are distinguished) appear to reflect quite different orientations: in simple terms the *aahak* represent a masculine, territorial and 'outer-oriented' form of power which is contrasted with the female-focused and lineage-derived potency of the *puu nyaa* spirits. Of particular importance is the way in which the *aahak* represents a point of articulation between the lineage-based authority of the *puu nyaa* spirits and the more widespread regional jurisdiction of higher-level tutelary spirits. In other words, when considered together, the *phii puu nyaa* and *aahak* can be seen as combining a concern both with descent and with locality, in which the local is perceived non-parochially, as existing within a network of spiritually interlinked places.

The outward orientation of the *aahak* provides some valuable insights into local perceptions of power. In very general terms two alternative approaches to the study of

Reproduced with permission of the copyright owner. Further reproduction prohibited without permission.

power can be identified in Thai studies. The first, which draws substantially on elite ideology, sees power as being located in central places. In the pre-modern era this centralised power 'radiated' from the auspicious centres of Buddhist virtue whereas in the modern era it has 'penetrated' into the periphery through various strategies of bureaucratic incorporation (Walker 1999: 6-7). An alternative perspective on power moves away from a concern with 'domination, command and control' towards a more spatially and socially dispersed focus on diverse manifestations of 'potency' (Reynolds 2005: 214). Those who have taken this direction have addressed the alternative powers of amulets, tattoos, spells, spirits, saints and ascetic bodies and point to the 'raw energies of nature' itself (Reynolds 2005: 225). There is sometimes a tendency to dichotomise these alternative loci of power, framing the latter as manifestations of rebellion and resistance to the more orthodox forms of central power. But, as Reynolds (2005: 217) has highlighted, it is in the 'spaces between these polarities' that more subtle insights into the nature of power can be found. Important insights have been gained from the recognition that supposedly central power often relies on the potency of wilderness and autochthony for its renewal (Tanabe 2000; Tapp 2000). My aim is to approach this issue from another perspective by examining how the supposedly peripheral and parochial draws regional power into more intimate domains.

Key features of the *phii puu nyaa* and *phii aahak*

Many aspects of *puu nyaa* spirit belief and practice in Baan Tiam are similar to those reported by previous writers. First, the spirits are referred to as *phii puu nyaa* (*puu nyaa* spirits). As a number of writers have noted, directly translating *puu nyaa* is problematic. In central Thai *puu yaa* refers to the paternal grandparents. But in northern Thai it refers, more generally, to various categories of kin in the parental and grandparental generation and, in some cases, any deceased kinsmen (Turton 1972: 236; Wijeyewardene 1977: 19; Cohen and Wijeyewardene 1984b: 249; Davis 1984: 59; Rhum 1994: 13-14). In Baan Tiam, the term seems to refer to a general category of older people. Given this kinship referent, Turton (1972: 241, 246) takes the view that *puu nyaa* spirit beliefs are, in many respects, similar to ancestral cults and that the spirits 'constitute a category of dead kinsmen'. This view gains some support in Baan Tiam where the *phii puu nyaa* are often referred to explicitly as ancestral spirits (*phii baanphaburut*) and the deference granted to them is described as being analogous to that granted to senior members of the lineage. But it must be said that this ancestral identification is vague, and the *phii puu nyaa* are not associated, either through naming or through narrative, with any particular ancestor.

Some writers reject the view that the spirits are ancestral spirits, arguing that they are 'spirits that belonged to the ancestors' rather than actually spirits *of* the ancestors (Wijeyewardene 1977: 19; see also Davis 1984: 60; Rhum 1994: 15). This view is also salient in Baan Tiam and it draws on an even more general meaning of *puu nyaa*. In my experience, this term is often used to refer to what is best described as an authoritative past. For example, the typical answer provided when villagers are asked why a particular ritual practice is undertaken is that it came to them from the *puu nyaa*. Context suggests that this is not meant to refer to people in any specific kin relationship—nor to any older (or deceased) people more generally—but to a vaguely defined past era. This is an authoritative past that is used to justify contemporary practice. As such, I am sympathetic to the view that for many people the *phii puu nyaa* are not actually spirits of the ancestors, but spirits that have been passed down from the time of the ancestors and whose moral force and potency derives from this ancestral period.

A second key feature in Baan Tiam, and in other areas of northern Thailand, is that the

Reproduced with permission of the copyright owner. Further reproduction prohibited without permission.

puu nyaa spirits are resident in a limited number of 'origin' or 'stem' houses (*heuan kao*) within the village. The presence of the spirit in these houses is marked by a small non-descript, wooden shelf (*hing*) located in the main bedroom. In Baan Tiam there are seventeen such origin houses (out of a total of about 100 households). These local origin houses account for the *phii puu nyaa* allegiances of about three-quarters of the village. The rest have origin houses in other villages and districts. Two origin houses in the village are particularly important, accounting for one quarter of village membership between them. Membership in the other spirit groups is relatively small—many have only a handful of adult members within the village. The origin houses are usually home to the most senior woman within the group that is affiliated to the spirit. This senior woman is responsible for making offerings to the spirit, though a close matrilineally related kinswoman may stand in if she is unavailable.

Third, the *phii puu nyaa* are closely associated with women. In Baan Tiam, the villagers claim that all female children must pay respect (*naptheu*) to their *phii puu nyaa* and cannot abandon it. Only six adult women surveyed indicated that they did not have a *phii puu nyaa*: four were from locations or ethnic groups where there are no such spirits; one was the in-marrying wife (from another province) of a man who had abandoned his *phii puu nyaa*; and the sixth was the daughter of this woman. Abandonment can lead to retribution in the form of sickness among one of the spirit group members and in some cases can lead to possession by a malevolent form of the spirit (*phii ka*). The key role of women is underlined by the fact that in all but one of the origin houses, the custodian of the *phii puu nyaa* is a woman and women are much more heavily represented when offerings are made to the spirits. By contrast, men exhibit greater flexibility and nonchalance in their behaviour toward the *puu nyaa* spirits but, as we will see, masculine behaviour and values do play a key role in the broader field of spirit power in which the *puu nyaa* spirits are located.

Fourth—and here I am starting to venture into one of the key points of contention in previous discussions—there is a system of matrilineal descent associated with the spirits. My view, based on data collected in Baan Tiam, is that while there are some important exceptions there is clearly a strong and persistent tendency towards matrilineal recruitment to the spirit groups and matrilineal inheritance of the position of spirit group leader. This matrilineal orientation is evident in statements about ideal behaviour in relation to the *puu nyaa* spirits, in casual conversation and in responses to a survey of adult villagers about their *puu nyaa* allegiances. But, at the same time, there are social processes that challenge matrilineal orientations and introduce alternative orientations to spiritual power. In general terms, I see these processes not as destructive of *phii puu nyaa* belief but as highlighting its potential for adaptation. I return to these issues in detail later in the paper.

Fifth, regular offerings are made to the spirits both to request their protective power and to placate their retributive power. The key period for offering is in the ninth northern Thai month, which commences in late May or early June. The typical offering on this occasion is a chicken[2] accompanied by a few flowers, candles and sticks of incense. In many origin houses a pig's head is offered on the completion of each six-year cycle. Offerings are also made at Thai new year (in April) and on a range of less regular occasions: when members of the spirit group are getting married; when there are any unusual occurrences in the origin house that may disturb the spirit (for example, a village festival attracting visitors to the house); when members of the group are travelling away from the village; and when a household member or lineage relative dies. The spirit should also be appeased with offerings if it has been offended in any way.

Finally, I want to specifically address the authority of the *puu nyaa* spirits. Older people in the village report that, in the past, the spirits played a key role in regulating the sexual

Reproduced with permission of the copyright owner. Further reproduction prohibited without permission.

behaviour of the young women within the spirit group. Illness (especially fevers) and misfortune were often interpreted as arising from the spirit's anger at inappropriate sexual behaviour (*phit phii*—wronging the spirit), ranging from sexual intercourse to much more minor infractions such as an inappropriate touch. Offerings to the spirits (*kin phit*—eating the wrong), in the form of a pig's head for more serious offences, were required to redress the offence. In extreme cases, failure to make these offerings or making them incorrectly could lead to the death of someone in the spirit group. However, it is now well recognised that women's increased mobility for study, work and marriage has reduced the influence of the spirits (though the notion of *phit phii* can still be the focus of vigorous arguments between mothers and daughters). As one elderly woman stated, 'young girls today sit on passenger buses with unrelated men'. Others suggest that the availability of modern medicine means that it is no longer necessary to hold divination sessions to determine which young girl's sexual infraction had bought about sickness within the spirit group.

Currently, there appears to be considerably more emphasis on the *puu nyaa* spirit's protective power than its retributive power. In Baan Tiam the *puu nyaa* spirits are most commonly spoken of in terms of their role in securing the peace and safety of their descendants (*luuk laan*) and in providing protection when these descendants travel away from the village. The standard request made to the *puu nyaa* spirits is that they will enable the members of the lineage to *yuu yen pen suk*, a term that can be literally translated as 'living coolly and happily' but which embraces a range of meanings related to security, health and prosperity. This invocation of benevolent power was clearly expressed when Grandmother Jan made her regular yearly offering in early June 2004. The occasion was quieter than she had hoped, with only two of her eight daughters present, despite the fact that she had informed them all. She prepared the food for the offerings and took them to the bedroom. She lit some candles as she spoke to the spirit:

> On this day in the ninth month we have these things for you to eat, please make us live and eat well and give us good luck and good health. Today we are presenting chicken and other offerings, please protect us. Please, *puu yaa taa yaay*,[3] come and eat. After that make us live and eat well and protect your children and grandchildren.

This shift in the role of the spirits—from the specific regulation of sexuality to a broader and more benign protective role—can be seen as reflecting what Wijeyewardene (1977: 23) refers to as the 'functional malleability' of spirit beliefs. Tanabe (1991: 191) provides a key insight into this malleability. He suggests that, on the one hand, these *puu nyaa* spirits can be understood in terms of 'a kind of "biologically" defined kinship, focusing particularly on female sexuality and marriage'. However, this strictly matrilineal idea coexists with a broader sense in which the ancestors are 'detached from the idea of matriliny' and come to be identified as a 'single source of morality that determines the well-being, health and fortune of all members of the descent group, men and women'.[4] It appears that in Baan Tiam this latter, more benign, sense of spiritual authority now predominates and, as we will see in the following sections, it is associated with some dilution of matrilineal principles and the broadening of spiritual jurisdiction. But, as I will show, the enduring force of matriliny should not be understated.

The *phii aahak*

There is an additional aspect of *puu nyaa* spirit belief—the *phii aahak*—that also suggests the existence of alternative spiritual orientations. This has received little concerted attention in the existing literature. In many of the origin houses in Baan Tiam the presence of the *phii*

Reproduced with permission of the copyright owner. Further reproduction prohibited without permission.

puu nyaa is marked both by a shelf in the main bedroom and also by a wooden shrine located outside the house itself, often on the eastern side. These house-like shrines are usually built on small stilts—which raise them about half a metre or so off the ground—with a small set of steps for the spirit's access. These external spirit houses are closely associated with the *phii puu nyaa* and offerings are usually made both at the shelf within the house and in these external spirit houses. Many people in Baan Tiam refer to these external spirits as *aahak*. As we will see, *aahak* is a word that is widely used in northern Thailand, and elsewhere in the region, to refer to various classes of protective spirits. As some villagers point out, the word is similar to the central Thai word *aarakkha*, which McFarland (1944: 994) translates as 'protection, supervision'. Here there is clear expression of the protective, rather than retributive, role of *puu nyaa* spirits.

There are indications that these *aahak*, or something very similar, are a relatively common aspect of *phii puu nyaa* beliefs in northern Thailand. In their overview of the relevant literature, Cohen and Wijeyewardene (1984b: 250) state that some spirit groups 'have two shrines, one internal and another in the northeast or southeast corner of the house compound'. They refer to these external shrines as 'the slightest elaboration of the [*phii puu nyaa*] cult', making the important point, which I will pursue later, that with these external shrines 'the practice begins to look more like the rituals associated with locality shrines' (Cohen and Wijeyewardene 1984b: 251). Wijeyewardene (1977: 20) reports that these external spirit houses are 'often said to be the abode of the "protecting spirit"', which, in an earlier publication, he refers to as the *phii aahak* (cited in Rhum 1994: 82). Cohen's (1984: 298) data from Chiang Mai province indicate that over half of the spirit groups he studied 'had two shrines, one in the main bedroom ... and one in the compound called the *hau phii aahag* ("shrine of the guardian spirit")'. Broadly similar observations were made by Turton (1972: 227) for Chiang Rai, Potter (1976: 146) for Chiang Mai, McMorran (1984: 309) for Lampang and Davis (1984: 275) for Nan.

Before exploring the distinctions Baan Tiam villagers make between the *phii puu nyaa* and the *phii aahak*, it is important to note that in the minds of many villagers the two are merged, with people regularly referring to them as the same spirit or the same entity or commonly as the 'same ancestral spirit'. Significantly, almost all survey respondents stated that their *phii puu nyaa* and *phii aahak* are located at the same origin house. The only respondents who nominated a different location for their *phii aahak* were those where there was no *aahak* shrine present at the local origin house. Most of these nominated an *aahak* at a house in a nearby village, to which they are matrilineally related. Villagers also point out that the *phii puu nyaa* and *aahak* are worshipped at the same time and, as one informant stated, 'the steps for making offerings are the same and the same food is provided to both each year'. Another emphasised that 'when women get married it is necessary to tell both the *phii puu nyaa* and the *aahak*'.

But within a strong sense of common identity there is simultaneously a strong sense of distinction. Most simply, the distinction is expressed spatially—the *phii puu nyaa* lives (and takes care of) upstairs while the *phii aahak* lives (and takes care of) downstairs.[5] This is not just a matter of elevation; what is being said is that the *phii puu nyaa* lives within the house while the *phii aahak* resides outside it. There is some ambiguity in the symbolism of this spatial configuration. The *aahak*'s common location to the auspicious east of the house signals ritual superiority but its placement below the shelf of the *phii puu nyaa* signals inferiority, though, at the same time, its proximity to the earth suggests an alternative locus of power. The spatial statement (with its inherent ambiguities) is also a statement about gender. It is commonly expressed that the *aahak* is oriented toward men. As one informant says, 'its duty relates to men and men have the responsibility to serve it'. Some state that

Reproduced with permission of the copyright owner. Further reproduction prohibited without permission.

men follow the *aahak* while women follow the *phii puu nyaa*. Similarly, whereas women are the custodians of the *phii puu nyaa*, it is often—but certainly not always—asserted that men are responsible for making offerings to the *aahak*. These statements about gender are also commonly linked to ideas about differences in the jurisdictional scope of the spirits. As one elderly woman simply stated, 'women go upstairs, men live downstairs, so we make the place for offerings for the *aahak* downstairs so it can protect the men and can follow them to protect them wherever they go'. Another elderly woman, who is the custodian of an origin house, said that 'the *phii aahak* has a more widespread power, to protect men who go out to work'. And one of the few men in the village widely recognised for his detailed knowledge of spirits stated:

> The *aahak* is an ancestral spirit. It lives downstairs and is responsible for protecting the peace for the people in the house like a bodyguard and creating security for the members of the lineage (*luuk laan*). The *aahak* works harder than the *phii puu nyaa* and some people believe that it is stronger. When young people go a long way away they take some charcoal and mark their forehead with black and ask the *aahak* for protection, just like a soldier going off to battle.

In brief, it appears that the *aahak*'s protective force is combined with an outward orientation and this outward orientation is stereotypically linked not to matrilineal attachments but to masculine agency and territorial dispersion.

The role of matrilineal descent

How are people affiliated to these *puu nyaa* and *aahak* spirits? Does the presence of the *aahak* suggest that the importance of matriliny has been overstated? Are the values expressed in relation to the *aahak* evidence of the decline of matrilineal attachments in a more mobile socio-economic context?

This issue of the relation between matriliny and *phii puu nyaa* has been the subject of some debate. In the 1984 special issue of *Mankind*, McMorran (1984: 309) argued that the 'overall pattern [of spirit groups] is generally determined on the basis of locality' rather than descent. The key feature of this locality is the extended family compound in which there is a 'tendency' towards co-residence of 'married female siblings and matrilateral parallel cousins'. She agrees that groups have a 'matrilineal colouring' but suggests that this is largely a result of the fact that parental houses (including origin houses) are frequently inherited by the youngest daughter. In other words, what appears to be the application of a descent principle is, in fact, the outcome of more pragmatic concerns related to locally clustered residence and inheritance. One reflection of this pragmatism is that in-marrying men are incorporated into their wife's spirit group.

In his article in the same issue, Cohen (1984) took a contrary view. He provides a 'qualified defence' of the view that *puu nyaa* spirit groups can be described as unilineal descent groups. He suggested that matrilineal descent 'exists not only as an ideological construct but also as the unilineal criterion for unambiguous membership in corporate groups' (Cohen 1984: 293). Specifically, Cohen was critical of the view put by McMorran (1984), Turton (1972: 221) and others that at the time of marriage men may 'buy' entry into the spirit group of their wife. He argues that this view is based on a misunderstanding of the payments that precede marriage. The purpose of these payments, Cohen argues, is not to purchase entry into the spirit groups but to appease the spirits for the sexual contact with the bride in order 'to prevent the spirits causing harm to members of her group'. But he did suggest that the ideal of matrilineal recruitment may be blurred somewhat in practice given that the 'affective bonds between a father and his children' may lead him to take an interest

Reproduced with permission of the copyright owner. Further reproduction prohibited without permission.

in their spirit group. He also suggested that there may be cases where 'matrilineal descent was not the criterion for cult membership' (Cohen 1984: 294). He cited several cases including that of an in-marrying man from a distant town who took on his wife's spirits and another woman who joined her husband's group given that she was the only surviving member of her matrilineage. But Cohen (1984: 295) argued that such cases are caused by relatively exceptional demographic events and that, overall, recruitment to spirit groups by non-matrilineal criteria is 'by no means common'.

What does the information from Baan Tiam suggest about this issue? To answer this, it is useful to consider the position of women and men separately as there are considerable differences in both stated views and observed practice.

Women and the matrilineal principle

In relation to women, there is a commonly stated principle of matrilineal recruitment and little explicit distinction between the *phii puu nyaa* and the *phii aahak*. During informal conversations and more formal interviews, many villagers state that a girl inherits the spirit of her mother. In terms of reported behaviour, the matrilineal principle appears to be regularly followed. Where the mode of inheritance of membership could be identified from survey data, women took on the spirit of their mother in about 75 per cent of cases. Of course, strictly speaking, this is a matter of filiation (a link between mother and daughter) rather than descent, but among many informants there is also a strong sense of a lineal continuity that passes through the mother to the maternal grandmother and other more distant matrilineal relatives. Consider the simple statement of Kay—a single woman aged 34—that her spirit is located at the house of Grandmother Nuan. Tracing the relevant relationships, it becomes evident that Nuan's house was the residence of Kay's mother's mother's mother. Here there is a clear sense of descent, which extends beyond simple filiation with the mother's spirit to an origin house that is genealogically more distant. This descent ideology is also reflected in the regular references to those sharing the same spirit as forming a lineage (*trakul*), with talk of bloodlines (*say leuat*) that connect people with origin houses and with reference to the senior woman who is the spirit's custodian as the *ton trakul*, which can be translated literally as 'origin of the lineage'.

Of course, the matrilineal principle is not universal and there are exceptions. Thirteen women surveyed (out of a total of 145) indicated that they worshipped the *phii puu nyaa* of their husband. Not surprisingly, all of these were women born elsewhere who had married into the village. And, again not surprisingly, eleven of these thirteen came from villages well outside the local area. For these women, the power of physically remote lineage spirits appears less salient than that of the more immediate spirit of their husband. There is cultural provision for *puu nyaa* spirits to be 'divided' and brought to the village by in-marrying women but this appears to be relatively infrequent, probably due to the difficulty of establishing a matrilineage shrine in the mother-in-law's house (see also Mougne 1984: 303). Nevertheless, it is important not to understate the enduring force of the matrilineal linkages for in-marrying women. Overall, half (nineteen) of all in-marrying women indicated that they worshiped the *phii puu nyaa* in their natal home. Again, locality appears to be a factor with almost 70 per cent of this group coming from neighbouring villages where travel times are short and social and economic interactions are intense. Accordingly, descent ties can be relatively easily maintained.

There are also cases where an in-marrying woman has not adopted the spirit of her husband but her daughters have done so (taking on the local spirit of their father rather than the more remote spirit of their mother). This situation (and some of the other complexities of

Reproduced with permission of the copyright owner. Further reproduction prohibited without permission.

adherence to matrilineal principles) is well illustrated by Kluay's family (Figure 1). Kluay lives in a household compound with her husband, daughter and mother.[6] The main house in the compound is an origin house. In current memory the founder of the lineage and custodian of the spirit was Grandmother Maew. On her death she passed responsibility for the spirit to Grandmother Mon, her eldest daughter who also inherited the house. However, Mon had three sons and on her death custodianship of the spirit passed to her younger sister, Grandmother La, who lived in a nearby house. At one stage, the spirit was moved to La's house but it then possessed her and indicated its disapproval, so was returned to its original home. Nevertheless, La continued to act as the custodian until her death in 2004 when the position was passed to her daughter, Grandmother Thip.

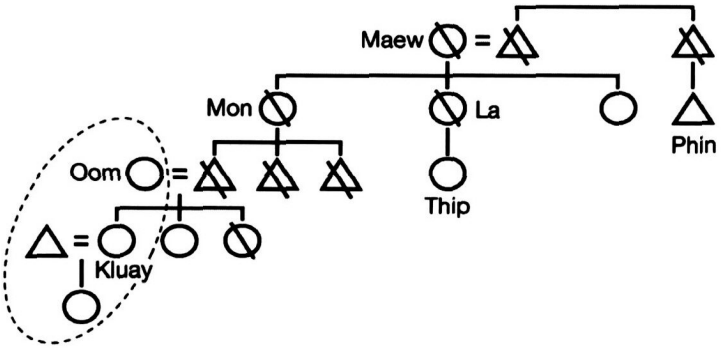

Figure 1: Kluay's family and close relatives

Where does Kluay's mother, Grandmother Oom, the current owner and occupant of the origin house, fit into this picture? Oom was an in-marrying woman from a neighbouring village (Baan Khua) and came to live with her husband and his mother, Mon. Oom did not adopt her husband's spirits but maintained her ritual connection with her maternal spirits in her natal village. She states quite clearly that she cannot make offerings to the spirit in her current house of residence because she is a daughter-in-law (*saphay*) who married into the household, not an actual descendant (*luuk laan tae tae*). Matrilineal ideology holds that a mother-in-law and a daughter-in-law living together like this is hazardous, as their different spirits are unlikely to get on (Davis 1984: 60). But in this case such a situation was unavoidable as Mon, the mother-in-law, had only three sons. Thus the household could only be maintained through virilocal residence. As a result, since the death of her mother-in-law and her husband, Oom has had to live with the somewhat odd situation whereby the house, which she has inherited, is in one important ritual sense controlled by people living elsewhere, given that custodianship of the spirit was passed to her mother-in-law's sister. I suspect this tension between virilocal domesticity and matrilineal descent may be one reason why Oom, even before her husband died, took up residence in a small room under the house where she lives until the present day. The main upper level of the house is now all but abandoned, except when the matrilineally related kin come to pay their respects to the spirit.

So far, the situation accords perfectly with matrilineal principles. The custodianship of the *puu nyaa* spirit has passed in the matrilineal line, taking this position outside the origin house, given that Mon only had three sons. Oom, who lives in the origin house, maintains her relationship with her mother's spirit in Baan Khua and, in fact, seems somewhat distant from the spirit resident in her own house.

Reproduced with permission of the copyright owner. Further reproduction prohibited without permission.

However, in April 2005 I received a message from my research assistant that Oom was claiming that I had offended the spirit in her house (primarily by entering into the room where the altar is located, and taking photographs, on a previous occasion when a minor offering was being made). In its annoyance the spirit had caused her second daughter (who lives in Bangkok) to fall over in the bathroom and break her nose, which required surgery. In order to remedy the situation it was necessary for me to make an offering of a pig's head. I was a little puzzled about this as, given the matrilineal principle to which Oom subscribes, her daughters came under the authority of the spirit in her natal village (with which I have had no dealings). My assistant asked Oom how this had come about. Her answer was important: her daughter eats in the house and lives her life in the house (that is, she had grown up there) and therefore she belongs to the spirit in the house more than the spirit at Baan Khua (Oom's natal village). In other words, localised domesticity is relevant, and sometime more relevant than matrilineal linkages, in orienting people towards sources of spiritual power.[7]

This point was underlined by the statements and actions of Kluay herself. Her view is that she follows the spirits of both her mother and her father (though a number of casual statements have indicated that this is not necessarily accepted by her father's matrilineal kin). Recently, when she was leaving to return to work in southern Thailand (having briefly returned home to cast her vote in the national election), she made modest offerings to the *phii puu nyaa* within her house (that is her father's spirit), to the *aahak* at this house, and to the village protective spirit (which is discussed further below). Having done this, she told me that all her ancestors, and her ancestor's friends (*pheuan puu nyaa*), now knew where she was going and would protect her on her travels. She made no such offerings to her mother's spirit in Baan Khua. Kluay is not alone in claiming links to her father's spirit. It is not uncommon in conversations about *phii puu nyaa* for women to refer to both the spirit on their mother's side (*phii taang mae*) and their father's side (*phii taang pho*). Some recount how they accompanied their father when he made offerings to his matrilineal spirits, though this participation often falls away following the father's death. Kluay's case is somewhat exceptional as she is actually resident in the compound of her father's origin house.

Men and flexibility

The most commonly held view in Baan Tiam in relation to men is that they have considerable flexibility in relation to spirit group membership:

> Worshipping spirits depends on who worships and who doesn't. There aren't strict rules; it's not definite. Some men worship the spirit of their father, the spirit of their mother and the spirit of their wife. Some men worship only the spirit of their wife and some don't worship any spirits at all.

Adding to the flexibility is the view expressed by some that men may worship both *phii puu nyaa* and *phii aahak* whereas others may worship one or the other or neither. This is not a distinction that is made in relation to women. And there is also the view that, in fact, men have no significant role or rights in relation to *puu nyaa* spirits. One senior woman in the village told me that men 'simply have no idea' (*mai ru reuang*) about spirits and one particularly culturally well-informed man told me that men had 'no rights' (*mai mii sit*) in relation to the *puu nyaa* spirits.

Masculine flexibility is evident in a number of types of cases. First there are men who indicate that they have no *puu nyaa* spirit. If we exclude in-marrying men from areas in Thailand where there is no such tradition of spirit worship, there are 20 men who fall into this category—ten locally born and ten from other areas of Chiang Mai province. Here there

Reproduced with permission of the copyright owner. Further reproduction prohibited without permission.

is a clear contrast with the very low rate of reported abandonment by women. The survey data was backed by the observation that men are considerably more likely to make dismissive statements about *puu nyaa* spirits than women, one man somewhat incredulous that I would bother researching the subject and telling me that talk of the spirits was just a way of scaring girls out of having sex.

The second case of flexibility relates to men who take on the spirits of their wives. Of the 53 in-marrying men, sixteen fell into this category. Again, as with women, most of these (twelve) came from relatively distant villages. The rationale here is straightforward. As one man said, 'I came to live in the village with my wife so I had to worship my wife's spirits'. Two locally born men indicated that they had done the same. There are some indications that this may be rather more common, or at least perceived to be so. A number of elderly women in the village indicated that their sons had taken on their wife's spirits; however, their sons indicated that they still worshipped the spirits of their mother. One of these women (who is the custodian of an origin house) had told her son to worship the spirits of his wife, because she disapproved of his marriage choice and did not want him to be involved in worshipping her matrilineal spirits any longer.

The statements made to the spirits on the occasion of marriage highlight the potential for incorporation of men into the spirit group of the wife. When a couple decide to live together (whether or not the 'marriage' is formalised), offerings must be made to both of their *puu nyaa* spirits. The offerings to the woman's spirit are the more substantial given the spirits' role in regulating female sexuality. Currently these offering take the form of a pig's head (plus the feet, tail and a portion of meat to be made into curries), though in the past much more substantial offerings (perhaps even a buffalo) were made. According to one woman, who is the custodian of an origin house, the short speech delivered when the offerings are presented to the spirit runs something like this: 'Today, there is a son, a grandson, coming to be part of this house; he has come to be the husband of this girl; he has come to live with us so please don't disturb him or scare him, please receive him as a descendant of the lineage'.w Here there seems to be a blurring of the distinction between domestic relations and descent relations, with the 'son' incorporated not just as husband or son-in-law but also as a member of the lineage. As such, I am inclined to disagree with the argument put by Cohen. It appears very likely that, for some villagers, the spirit offerings made on the occasion of marriage do, in effect, place an in-marrying man under the authority of his wife's spirit.

The third way in which men depart from the matrilineal principle is in relation to ritual responsibility for the *aahak*. As noted above, there is a common expectation that a man should manage the offerings to the *aahak*. Of course, men can hold office and power in matrilineal systems, but the pattern of transmission of such offices would typically be from mother's brother to sister's son, or perhaps a system of affinal transmission whereby the husbands of the women of the matrilineage pass positions between them (Potter 1977). But in Baan Tiam it is commonly reported that the responsibility for the *aahak* is ideally passed from father to son.

There are numerous cases that could illustrate the application of the patrilineal principle in relation to the *aahak*. But I will outline just one, and this can be done briefly as it takes us back to Kluay's house discussed earlier. As I mentioned, the current custodian of the *phii puu nyaa* is a woman in a direct matrilineal line from the remembered founding ancestress. However, the *aahak* is cared for by Uncle Phin who I initially thought was completely unrelated but who, upon enquiry, turns out to be the son of the elder brother of the husband of the founding ancestress (Figure 1). Explaining his position, he said, simply, that he followed the line of his father. But he also worships the spirits at a neighbouring origin

Reproduced with permission of the copyright owner. Further reproduction prohibited without permission.

house to which he is matrilineally related and where, to make things even more complex, his brother takes responsibility for the *aahak*. His brother was invited by the female custodian of that origin house to care for the *aahak*, given his high level of ritual knowledge. So, while the principle of father to son transmission of *aahak* custodianship is an ideal, there are often pragmatic reasons why someone else will come to fill the role (most commonly when a deceased male custodian has no sons living locally).

Placing matrilineal spirits in context

From the material in Baan Tiam it is clear that there is a strong sense, especially for women, in which the matrilineal link with the ancestral authority of the *puu nyaa* has a particular moral force. This ideology persists despite the fact that non-matrilineal forms of recruitment to spirit groups are by no means rare and that male commitment to matrilineal links with spirits is sometimes weak. Overall, I have no hesitation in continuing to gloss the *phii puu nyaa* as 'matrilineal spirits'. However, it is important to place the moral force of matriliny in context. Clearly there are aspects of the social field where matrilineal principles and practices are somewhat diluted and alternative connections to fathers, spouses and localities are emphasised. What is evident from the previous discussion is that, despite strong matrilineal sentiment, there is room for manoeuvre in defining alignments to *phii puu yaa* and that this flexibility is drawn upon in dealing with the day-to-day vicissitudes of marriage, relocation, domesticity and affinity. In the following sections I want to move on to examine some of the ways in which this flexibility can be understood in terms of a productive interplay with the broader demographic, bureaucratic and spiritual context.

Marriage patterns

As Mougne (1984) notes, there appears to be a relationship between key demographic variables, migration in particular, and patterns of *phii puu nyaa* worship. In Baan Tiam a key demographic phenomenon is the striking change in marriage patterns over the past two or three generations whereby the rate of village endogamy has dramatically declined. This is primarily the result of a substantial increase in the intensity of external socio-economic relationships. Although travelling traders and timber workers have been a longstanding source of (male) marriage partners, the opportunities for exogamous marriages have proliferated in recent decades. Three factors appear to be important: the proliferation of local development projects which bring workers into the local area; a significant move out of the village into non-agricultural employment as population increase has placed pressure on land resources; and a dramatic increase in urban higher education. The impact on marriage patterns has been stark. Among adults aged over 80 almost half had married within the village. This declines slightly for those in the 60 to 80 age group (42 per cent) but then collapses in the two younger age groups (22 per cent for the 40 to 60 age group and nine percent for those aged between 20 and 40). Exogamous marriage has come to dominate and, as a result, approximately 40 per cent of adults now resident in the village were born outside it.

In the case of village endogamy, the issue of affiliation to a spirit group is, in one important sense, unproblematic—there is no real tension between descent and locality. Both men and women can maintain relatively close links with the origin houses of their mother. This may be more marked for women, given the tendency for the houses of daughters to be located close to those of their mothers, but the modest spatial distances involved within the village pose no great obstacle for men in maintaining such links. Indeed, in the survey I conducted of the 75 endogamously married adults, only one man indicated that he had taken on the spirit of his wife (and, in this case, the wife had very recently established her own

Reproduced with permission of the copyright owner. Further reproduction prohibited without permission.

origin house). As I indicated above, there may well be more endogamously married men that have done so (including the man who fell out with his mother over choice of wife, hardly an uncommon occurrence) but the fact that all but one nominated their mother's spirit does suggest a certain conceptual match between endogamy and matrilineal affiliation.

The situation with respect to exogamy is somewhat different, but there is no clear-cut contrast and it would clearly be misleading to suggest that this aspect of demographic transformation necessarily leads to abandonment of natal spirits. In Baan Tiam there is a substantial group of in-marrying women and men who maintain links with their mother's spirits in their natal village. But it is clear that people marrying into the village are rather more likely than those marrying endogamously to adopt the spirits of their spouse within Baan Tiam. In all there were 29 people who fell into this category, about twelve per cent of the people in the village for whom I have information on spirit affiliation—not a large number, but more than an occasional anomaly and creating potential for alternative ideological justifications. For some there is a clear sense in which the facts of localised domesticity (living, eating and reproducing in a particular place) orient people to links with the spirits of that place, regardless of descent.

It seems likely that adoption of the spouse's spirit may also have important implications for the descent principle in the following generation. Here there is a further dilution of any principle of unilineal recruitment, precisely because children can readily follow either the spirit of the father or the mother. This is not an ideologically or practically fraught decision, because both father and mother follow the same spirit. From the point of view of the children, they are simply taking on the spirits held jointly by their parents. Matriliny—or, for that matter, patriliny—is hardly relevant. This situation would also allow for the statements that boys follow the spirit of the father while girls follow the spirit of the mother. This may be further elaborated into the view that boys follow the *phii aahak* while girls follow the *phii puu nyaa*. This does not amount to different principles of descent—descent is not at issue—but of making observances to these spirits in what are seen as gender appropriate ways (Rhum 1994: 74).

Surnames

Bureaucratic action has also contributed to some attenuation of the potency of matrilineal linkages with the ancestral past (Davis 1984: 55). Surnames were introduced in Thailand in a 1913 decree that also required married women to take on the surname of their husband, and children to take the surname of their father. Surnames were essential for dealing with the rapidly expanding national bureaucracy and some older villagers recall with amusement how their current surnames were the result of misspelling and misunderstandings on the part of non-local government officials. While it has been suggested that surnames have had minimal impact on rural Thai sociality (Vella and Vella 1978: 135), in Baan Tiam it is clear that the presence of surnames creates significant flexibility—and even confusion—about the concept of 'lineage'. On the one hand, lineages are defined matrilineally by reference to their 'origin houses' and, as noted earlier, the female custodian of the *puu nyaa* spirit resident in these houses is referred to as the 'origin of the lineage' (*ton trakul*). However, if Baan Tiam residents are asked to name the main lineages in the village, their answer invariably refers to surname groups. It soon becomes clear that in the day-to-day social life of the village, groups of patrilineally related kin are much more explicitly marked (given their surnames) than groups of matrilineally related kin, and in discussions of lineage there is constant slippage into patrilineal terms. Sometimes even the predominantly matrilineally

Reproduced with permission of the copyright owner. Further reproduction prohibited without permission.

constituted spirit groups are referred to in terms of a surname, where that surname is the patrilineally inherited surname of the husband of the custodian of the group.

Surnames do dilute matrilineal attachments but they also provide the basis for an alternative orientation to the authoritative past. Surname groups are the patrilineally related descendants of the original surname-founding male ancestors. Discussions of genealogy often make their way, eventually, to these origin males who arrived, often as traders or timber workers, and married local women, thus bringing their surnames to the local area. Grandmother Sai provides a good illustration of this emphasis on patrilineal linkages and masculine agency. She is the custodian of an origin house, which she inherited from her mother and mother's mother. She speaks proudly of her lineage but in doing so recounts a story about the origin of her surname (her knowledge of her mother's family is very sketchy). She claims that her 'surname founding' ancestor came from an aristocratic family in Chiang Mai. However, as a result of a family dispute he was forced to leave Chiang Mai and come to a nearby village to live. He married locally, passing his surname to his descendants who are now numerous, and influential, in Baan Tiam and surrounding villages. Despite the long period that has passed and the considerable genealogical distance involved, this connection to Chiang Mai aristocracy is remembered and, in Sai's eyes, given added weight and ritual authority by the fact that her son (now deceased) was a spirit medium for one of Chiang Mai's main protective spirits. So, for Sai—the custodian of the spirit of a matrilineage—it is the patrilineal connection to Chiang Mai aristocracy that gives her lineage status.

The hierarchy of spirit administration

The domestic *puu nyaa* spirits are one element in a complex array of local and regional spirits. Exploring linkages with this broader spiritual field provides valuable insights into the outward oriented aspects of the *phii puu nyaa*. Most immediately relevant in Baan Tiam are the three village protective spirits.[8] Local legend has it that the largest and most impressive spirit shrine was first established by the three original male settlers in the area. This is a classic story of domestication of a previously wild forest spirit and underlines the ideological importance of men from outside entering and establishing key local institutions. This spirit house is now located towards the western fringe of the village, but in all likelihood it was originally established to the auspicious east of what I suspect is the original cluster of houses (now forming part of the area referred to as the 'low village'). A second protective spirit is located to the southeast, in an area referred to locally as the 'hill village', while the third is located just to the north of the village, adjacent to the settlement known as the 'new village'.

These village spirits are territorial spirits rather than ancestral or descent spirits. One is affiliated to these spirits as a result of residence in a particular area. The territorial domain of these spirits is often expressed as paralleling the modern administrative structure with increasingly inclusive areas ruled over by increasingly powerful officials. It is no coincidence that each of the three locally recognised hamlets in Baan Tiam has its own spirit, with the spirit of the original hamlet sometimes described as the 'chairman' who presides over the other two assistant spirits (just as the village headman has two assistants). It is important to note that this territorial hierarchy extends well beyond the village: first to the 'district spirit', located a few kilometres to the north at the site of a natural spring, and then to the protective spirits of Chiang Mai itself. As a number of writers have noted, there is a common (folk and academic) perception that village spirits and higher level tutelary spirits 'are part of the same network', despite the significant differences in their level of

Reproduced with permission of the copyright owner. Further reproduction prohibited without permission.

power (Anan 1999: 158; see also Tanabe 1988: 9; Rhum 1994: 41, 43; Shalardchai 2002). This is underlined by the high level of symbolic continuity in ritual practices at the various levels.

Not surprisingly, given the symbolic referents to territorial administration, village protective spirits in Baan Tiam and surrounding villages are clearly masculine and express masculine power. They are referred to as *jaw*—best translated as 'lord' or 'prince'—and occasionally given other aristocratic titles. The shrines of these spirits are sometimes referred to as 'prince's houses' (*khum*) or, in more modern terminology, as 'offices' (*offis*). They are surrounded by tethering posts (*lak chang lak maa*) to which the lord can tie his elephants and horses. These spirits are also associated with military power. According to one story, the people in Baan Tiam first recognised the power of the major village spirit when invading Burmese troops decided to rest near the tree where he resided. The spirit caused the soldiers to fall into a deep slumber, making their capture easy. The custodians of these spirits are men and at the key new year offering to the major village spirit men predominate among those assembled for the ritual. Earlier, I noted that Kluay made a small offering to the village spirit prior to her departure for work. In fact her husband made this offering, given that it would have been inappropriate for her to enter too far into the lord's palace. Some villagers associate these village spirits with the 'city pillars' (*lak meuang*) that appear in larger settlements and which are closely associated with chiefly power.

How do these village level spirits relate to the *puu nyaa* spirits? The argument I want to present here is that the *aahak* represent a key point of articulation between territorial and ancestral spirits. Important insights into this linkage were provided by a young monk from a neighbouring village who is particularly well versed in local culture. When I asked him about the *aahak* I had encountered in Baan Tiam,he told me that *aahak* are spirits that live in the forest, particularly in large trees, and their presence is often marked by small shrines. The *aahak*, he said, represent sacred things in natural areas, warning people against inappropriate behaviour. What is interesting is that he described the *aahak* as precisely those forest spirits (resident in large trees) that are domesticated to become the village protective spirits. In Baan Tiam the main village spirit shrine is located next to a large and allegedly ancient tree. The spirit is often referred to as the 'lord of the lucky tree', a reference to the fact that sap from the tree is believed to form the shape of lottery-winning numbers when the bark is scratched. One of his assistant spirits is the 'lord of the cool forest', a reference to the cluster of large trees that surrounds his shrine. Associations between village spirits and large trees are also a common feature in neighbouring villages and, in fact, throughout the region the relationship between tree spirits and tutelary spirits—including the spiritual protectors of major cities—is well established (e.g. Anan 1999). When I asked the monk why *aahak* shrines in Baan Tiam were located within the village (rather than in the forest) and at individual origin houses, he replied that these were the branch offices of the major *aahak* (though it was not clear where the 'head office' actually was).

A woman who is the custodian of an origin house in a village a few kilometres from Baan Tiam made similar observations. She told how she originally split her *puu nyaa* spirit from her home in a neighbouring district. The spirit is represented, as it usually is, by a wooden shelf in her bedroom. As in Baan Tiam, she also has an external shrine that she refers to as 'lord *puu* lord *nyaa*' (*jaw puu jaw yaa*). This terminology is also sometimes used in Baan Tiam and seems to indicate an elevation in status of the *puu nyaa* spirits towards that of the territorial 'lords'. She said that she erected this external shrine some years ago—on the advice of a spirit doctor when she fell ill—to accommodate the village protective spirit from her natal village. Significantly, she also referred to this village level spirit as the origin of her lineage (*ton trakul*). She said that the external shrine at her origin house was the 'branch'

Reproduced with permission of the copyright owner. Further reproduction prohibited without permission.

(*sakaa*) of the village protective spirit (seemingly referring to both the village spirit in her natal village and in her current village).

There are a number of other elements that point to this close relationship between the *aahak* spirits and the higher level territorial spirits. First, the design of the *aahak* shrines and the larger spirit houses is similar. In Baan Tiam the domestic *aahak* shrines are considerably smaller than the major village spirit shrine, though comparable to the shrines of the two 'assistant' village spirits. At least one of the *aahak* shrines has an elephant tethering post (*lak chang*) standing next to it, clearly marking the aristocratic pretensions of its resident. In the nearby village of Baan Peung, the spirit house for one domestic *aahak* (to which a number of Baan Tiam residents are linked) is an impressive structure, comparable to that of any of the village protective spirits I have seen in the local area.

Second, some of the domestic *aahak* take on identities that are the same as those of protective spirits that have local and regional influence. As Wijeyewardene (1977: 22) has noted, 'in some cases at least, the domestic spirits share the names of the territorial ones'. Most generally, this is suggested by the use of the word *aahak* itself. This is a word that is used throughout the region to refer to protective spirits of widely varying scope and power, underlying the hierarchical continuity between lineage, village and regional spirits. In one nearby village the major tutelary spirit is actually referred to as the *aahak*. In another village, the village protective spirit is referred to as lord Khamdaeng. This is also the name of the spirit that is said to possess a woman who is the head of one of the main *puu nyaa* spirit groups in this village (a number of Baan Tiam villagers are members of this group). In fact, Khamdaeng is a famous legendary figure in Chiang Mai, and is reportedly worshipped in many areas of the province, with his headquarters in a major cave system in the northern part of the province (Swearer, Sommai and Phaithoon 2004: 37). Wijeyewardene (1986: 131) reports that Khamdaeng was referred to as the *aahak luang* (great protector) of Chiang Mai. In Chiang Rai, Turton (1972: 244, 246, 255) found that Khamdaeng was present both as a 'village cluster locality spirit' and as one of the lineage spirits and his cult occupied an 'intermediary position' between the *puu nyaa* cults and the state level cults centred on the city pillar (*lak muang*). Similarly, the domestic *aahak* in Baan Peung mentioned in the previous paragraph is referred to by a number of aristocratic names, with clear links to the tutelary figures of Chiang Mai. And in Baan Tiam itself, one elderly women claims to be a medium for her *aahak* who she refers to as Lord Somphet, another figure from the panoply of Chiang Mai spirits (Wijeyewardene 1986: 213). Up until early 2005, her *aahak* had no shrine, a fact that she lamented. Initially she marked the presence of this aristocratic spirit by placing a child's pink umbrella in the midst of a pile of wood. Later she persuaded her son to construct a rather elaborate shrine—using corrugated roofing material and decorated with colourful garlands—so the spirit could be appropriately worshipped during the new year celebrations.

Discussion and conclusion

The matrilineal *puu nyaa* spirits in northern Thailand are one element of the panoply of power and authority, with their local potency congealed in origin houses scattered throughout the village. Their protective power contributes to a sense of security, 'coolness' and good health. And their retributive power—sometimes made real in the form of accident, sickness, possession and even death—provides a charter for appropriate behaviour. Though there are some risks in recognising the authority of the *phii puu nyaa*, there are also clearly substantial benefits and rates of outright abandonment appear to be modest, though more common among men than women. The ritual obligations to the *phii puu nyaa* are not

Reproduced with permission of the copyright owner. Further reproduction prohibited without permission.

particularly onerous or time-consuming and, although low key and essentially private, offerings to the spirits are regularly made. The data from Baan Tiam should prompt some reassessment of the common view that *puu nyaa* spirit beliefs are 'increasingly inconsequential' (Tanabe 2002: 52).

As we have seen, it appears reasonable to refer to the *phii puu nyaa* as matrilineal spirits. Matrilineal connections provide the most common basis for recruitment to the spirit groups and for women—to whom the spirits are most closely associated—matrilineal principles are dominant in formal and informal discussions about relationships with the *puu nyaa* spirits. But there are competing forces and *phii puu yaa* matriliny needs to be understood in terms of the interplay between local descent principles and broader demographic, bureaucratic and spiritual contexts. The material from Baan Tiam suggests that matrilineal orientations can become attenuated when large numbers of people marry exogamously and live away from their matrilineal kin. In such situations it is relatively common (though by no means universal) for people to emphasise the spiritual authority of the *phii puu nyaa* of their spouse, an act that dilutes the matrilineal principle in their generation and the next. In other words, the potency of the mother's line is not essential but is diminished if not regularly constituted through social interaction and ritual practice. This dilution of the spiritual authority of the mother's line has also been compounded by the Thai state's introduction of patrilineally inherited surnames This explicit marking of patrilineal connection creates ambiguity about the constitution of lineages and ideologically highlights the role of men as providing the link to the authoritative past. This foundational role of masculine agency is also expressed in the village level spirit cults. Here protective power is derived not from the mother's line but from the action of men.

The key ethnographic argument presented in this paper is that the domestic *aahak* observed in Baan Tiam can be seen as condensations of some of the more territorial, male-oriented and patrilineal tendencies present in local systems of spirit belief and practice. This is apparent in their location (outside the house where they watch over the affairs of men), in the patrilineal inheritance of their predominantly male custodianship and in their similarity to village and regional tutelary spirits. But I am not suggesting that this alternative orientation necessarily undermines the authority of the *phii puu nyaa*. My preference is to see the *phii puu nyaa* and *phii aahak*—which are often referred to as a single entity—as combining different elements of a complex social system. The *aahak* functions, in particular, as a point of articulation between the potency of the lineage spirits and the potency of territorial spirits that have a more spatially expansive jurisdiction.

There are some important parallels between my argument here and that put by Tanabe (1991) in relation to the *phii meng* cults, a variant of the *phii puu nyaa* phenomenon. The *phii meng* cults are characterised by relatively large memberships (sometimes up to 100 households) and elaborate rituals with dancing by possessed female members of the cult and extravagant animal sacrifice. Like the *aahak*, the *phii meng* are represented by external shrines located in the compound of the lineage head and their key ritual officiants are male. The importance of masculine power in the cults is also reflected in the belief that they were originally patrilineally inherited and the reference to male members of the cult as *kamlang* (strength). Of particular interest is Tanabe's report that the *meng* cult groups have a 'pantheon' of named ancestor spirits who are referred to as lords (*caw*) and who are regionally widespread. These ancestor spirits have a 'foreign nature' and are believed to have been obtained from the Mon[9] (Tanabe 1991: 194, 202). They also have 'the quality of wielding extraordinary tutelary power' (Tanabe 1991: 202). In brief, although the specific historical and ethnographic links between the *phii ahaak* and the *phii meng* remain to be

Reproduced with permission of the copyright owner. Further reproduction prohibited without permission.

explored, it is clear that in both cases *puu nyaa* spirits are linked (with varying degrees of elaboration and hierarchical structuring) with higher-level spiritual authority.

A focus on linkages between the *puu nyaa* spirits and the broader panoply of spirits can provide useful insights into local perceptions of power. As noted earlier, it is commonly observed that northern Thai spirits are conceptualised as forming a hierarchy, with networks that extend to Chiang Mai and even to Bangkok itself (Shalardchai 2002). However, while the symbolic continuity between different types of spirit belief is highlighted, some writers also convey a strong sense of a functional disconnection between 'higher' and 'lower' level spirits. This is most strongly put in another important paper by Tanabe (1988: 3) in relation to the Tai of Sipsongpanna. He emphasises the ideological contribution of state level 'guardian cults' to the creation of an 'illusory community' in the context of relations of exploitation between the dominant ruling class and the peasantry. State level spirit rituals 'should be seen as an ideological apparatus employed by a ruling class as an alternative to the exercise of violence' whereas village and domestic spirits represent the (presumably non-illusory) autonomy of the village and its collective antagonism toward outsiders (Tanabe 1988: 19, 10-11). In a similar vein, in his discussion of the city pillar (*lak muang*) in Chiang Mai, he writes that its powers 'which transcend human experiences and day-to-day social relations, can be differentiated from Khon Muang [northern Thai] representations of kin groups (*phii pu ña* or ancestor spirits) and of village communities (*phii ban*, or village spirits)' (Tanabe 2000: 301). A similar argument is put by Anan (1999: 158-159) when he states that Chiang Mai's chiefly spirit rituals (though historically grounded in local practice) were oriented towards the establishment of state legitimacy whereas similar rituals performed in local communities were primarily concerned with satisfying the emotional needs of villages. This radical separation between levels is also conveyed by Turton (1972: 253) when he describes the *lak muang* ritual previously held in the district as representing 'remote' and 'alien' princely power. In contrast to the offerings to the *puu nyaa* spirits or lord Khamdaeng, this was a ritual in which villagers were 'unwilling' or, at best, 'ambivalent' participants.

Of course, it would be absurd to deny the ideological importance of public spirit rituals undertaken by the region's pre-modern chiefs. Nor is it unreasonable to argue that the contemporary symbolic parallels between spirit hierarchies and administrative hierarchies add some ideological legitimacy to modern bureaucratic incorporation. And there is no doubt that *phii puu nyaa* and *aahak* rituals are usually rather private events, often with quite domestic and even intimate objectives. But the radical separation of function proposed by some observers tends to characterise the local orientation to central power as false (in assuming a commonality that does not really exist), parochial or resistant. Perhaps there is an alternative perspective. In Baan Tiam the *aahak* shrines present at *phii puu nyaa* origin houses are an attempt to draw external power into a more intimate and localised sphere. This act of localisation and domestication is underlined when, on the occasion of major offerings to the *puu nyaa* spirits, the offering tray for the *aahak* is taken not to the external shrine but to the bedroom where the *puu nyaa* shelf is located. The *aahak* must enter the bedroom in order to join the feast. In other words, a key concern of village practice is to enter into intimate relations of exchange with representatives of external power. It is well recognised that the potency of the *puu nyaa* spirits is limited and that forces with a broader jurisdictional range must be drawn upon to help ensure local peace, security and well-being. The aim is to draw external lords and masters into the intricate intimacy of domestic life. A question for further consideration is how this inclination might play out in dealings of a more secular and more explicitly political nature.

Reproduced with permission of the copyright owner. Further reproduction prohibited without permission.

Acknowledgements

The material in this paper owes much to the diligent efforts of my research assistants, Rungnapa Kasemrat and Supranee Davis. I also thank the residents of Baan Tiam for their good-humoured tolerance of my research presence. Craig Reynolds and participants in the Australian National University's Anthropology Seminar series, especially Nicholas Tapp, have provided valuable comments on previous versions of the paper. Anonymous readers reports were also extremely useful in highlighting issues neglected in the originally submitted version.

Notes

1. Baan Tiam (a pseudonym) is an ethnically northern Thai (*khon muang*) village of 418 people (about 100 households) engaged in rice cultivation in the wet season, cash cropping in the dry season and an array of off-farm labouring activities. It is located about one hour's drive from the main northern Thai city of Chiang Mai.
2. Though some participants, typically those not resident at the origin house, may only offer a chicken egg.
3. Note her use of the central Thai term that, literally, refers to both the paternal and maternal grandparents.
4. Thanks to Paul Cohen for drawing my attention to this important point.
5. The typical northern Thai house is built on stilts with the living and sleeping quarters located on the upper level.
6. The mother lives in the main house (this is where I stay when I am in the village) while Kluay, her husband and her daughter live in a small house located just next to it.
7. On a later visit to the village I did make the required offering. Interestingly, Oom took responsibility for preparing the various offerings (various forms of pork curry to accompany the pig's head) but, again, insisted that she could not actually present the offerings to the spirit. This role was performed by Jan, the younger sister of Mon and La, given that Thip was unavailable owing to a doctor's appointment at the district hospital.
8. There are numerous *caw thii*—minor territorial spirits that protect specific local areas, such as house sites. Most houses have *caw thii* shrines that are usually considerably smaller than the *aahak* shrines.
9. The Mon predated northern Thai settlement in the region.

References

Anan Ganjapan. 1999. Pitti way phii muang lae amnaat rat nay Laana. In Princess Maha Chakri Sirindhorn Anthropology Centre (ed.) *Sangkhom lae Watthanatham nai Prathet Thai*, pp.150-161. Bangkok: Princess Maha Chakri Sirindhorn Anthropology Centre.

Cohen, P. 1984. Are the spirit cults of Northern Thailand descent groups? *Mankind* 14(4): 293-299.

Cohen, P. and G. Wijeyewardene (eds). 1984a. *Spirit Cults and the Position of Women in Northern Thailand.* Special Issue of *Mankind* 14(4): 249-360.

Cohen, P. and G. Wijeyewardene. 1984b. Introduction. *Mankind* 14(4): 249-262.

Davis, R. 1984. *Muang Metaphysics: A Study of Northern Thai Myth and Ritual.* Bangkok: Pandora.

Gray, J. 1990. The Road to the City: Young Women and Transition in Northern Thailand. PhD Thesis, Macquarie University, Sydney.

Irvine, W. 1984. Decline of village spirit cults and growth of urban spirit mediumship: the persistence of spirits beliefs, the position of women and modernisation. *Mankind* 14(4): 315-324.

McFarland, G. 1944. *Thai-English dictionary.* Stanford, CA: Stanford University Press.

McMorran, M. 1984. Northern Thai ancestral cults: authority and aggression. *Mankind* 14(4): 308-314.

Reproduced with permission of the copyright owner. Further reproduction prohibited without permission.

Mougne, C. 1984. Spirit cults and matrifocality in northern Thailand: a demographic perspective. *Mankind* 14(4): 300-307.

Potter, J. 1976. *Thai Peasant Social Structure*. Chicago, IL: The University of Chicago Press.

Potter, S. 1977. *Family Life in a Northern Thai Village: A Study in the Structural Significance of Women*. Berkeley, CA: University Of California Press.

Reynolds, C. 2005. Power. In D. Lopez (ed.) *Critical Terms for the Study of Buddhism*, pp.211-228. Chicago: The University of Chicago Press.

Rhum, M. 1994. *The Ancestral Lords: Gender, Descent, and Spirits in a Northern Thai Village*. Center for Southeast Asian Studies Special Reports 29. DeKalb, IL: Northern Illinois University, Center for Southeast Asian Studies.

Shalardchai Ramitanondh. 2002. *Phii Jaw Naay*. Chiang Mai: Rong Phim Muang Chiang Mai.

Swearer, D, S. Premchit and P. Dokbuakaew. 2004. *Sacred Mountains of Northern Thailand and their Legends*. Chiang Mai: Silkworm Books.

Tanabe, S. 1988. Spirits and ideological discourse: the Tai Lu guardian cults in Yunnan. *Sojourn* 3(1): 1-25.

Tanabe, S. 1991. Spirits, power and the discourse of female gender: the *phi meng* cult of northern Thailand. In M. Chitakasem and A. Turton (eds) *Thai Constructions of Knowledge*, pp.183-212. London: School of Oriental and African Studies.

Tanabe, S. 2000. Autochthony and the Inthakhin cult of Chiang Mai. In A. Turton (ed.) *Civility and Savagery: Social Identity in Tai States*, pp.294-318. Richmond, VA: Curzon Press.

Tanabe, S. 2002. The person in transformation: body, mind and cultural appropriation. In S. Tanabe and C. F. Keyes (eds) *Cultural Crisis and Social Memory: Modernity and Identity in Thailand and Laos*, pp.43-67. Honolulu, HI: University of Hawai'i Press.

Tapp, N. 2000. Ritual relations and identity: Hmong and others. In A. Turton (ed.) *Civility and Savagery: Social Identity in Tai States*, pp.84-103. Richmond, VA: Curzon Press.

Turton, A. 1972. Matrilineal descent groups and spirit cults of the Thai-Yuan in northern Thailand. *Journal of the Siam Society* 60(2): 217-256.

Vella, W. and D. Vella. 1978. *Chaiyo! King Vajiravudh and the Development of Thai Nationalism*. Honolulu, HI: University of Hawai'i Press.

Walker, A. 1999. *The Legend of the Golden Boat: Regulation, Trade and Traders in the Borderlands of Laos, Thailand, Burma and China*. Richmond: Curzon Press.

Walker, A. 2001. The 'Karen consensus', ethnic politics and resource-use legitimacy in northern Thailand. *Asian Ethnicity* 2(2): 145-162.

Walker, A. 2004a. Karen cultural capital: consensus and contestation. *Asian Ethnicity* 5(2): 259-265.

Walker, A. 2004b. Seeing farmers for the trees: community forestry and the arborealisation of agriculture in northern Thailand. *Asia Pacific Viewpoint* 45(3): 311-324.

Wijeyewardene, G. 1977. Matriclans or female cults: a problem in northern Thai ethnography. *Mankind* 11(1): 19-25.

Wijeyewardene, G. 1986. *Place and Emotion in Northern Thai Ritual Behaviour*. Bangkok: Pandora.

Reproduced with permission of the copyright owner. Further reproduction prohibited without permission.